MODEL 82206
BARE REEL
SERIES “R”

OWNER/OPERATOR MANUAL

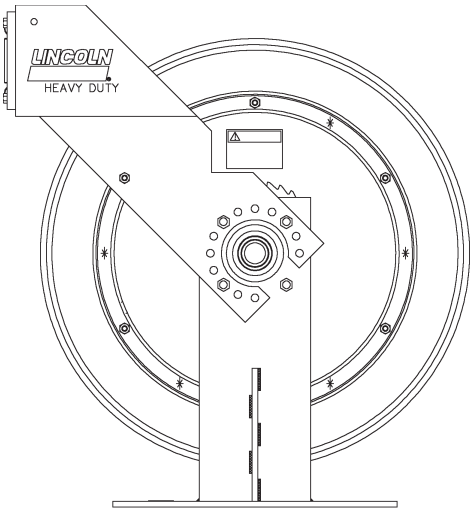

SPECIFICATIONS

Maximum working pressure	5000 psi.
Material Inlet	1/2” NPT (Female)
Material outlet	1/2” NPT (Female)
Sheave width	5-1/2”
Sheave diameter	19-1/4”
Drum diameter	12-3/4”
Overall width	8-1/4”
Overall height	22-1/2”
Overall depth	21”

Maximum hose capacities (including hang down):

1/4” I.D. Air/waler hose (SAE 100 R6)	50 ft.
1/4” I.D. Grease hose (SAE 100 R2)	50 ft.
3/8” ID. Air/water hose (SAE 100 R6)	50 ft.
3/8” I.D. Grease hose (SAE 100 R2)	50 ft.
1/2” ID. Air/water hose (SAE 100 R6)	50 ft.
1/2” ID. Oil hose (SAE 100 R3)	50 ft.
1/2” I.D. Grease hose (SAE 100 R2)	50 ft.
5/8” I.D. Oil hose (SAE 100 R1)	50 ft.

NOTE: Maximim hose capacilies are based on SAE specified hoses. Exceeding these capacities voids warranty. Refer to DELIVERY HOSE INSTALLATION for proper hose to reel assembly.

IMPORTANT

THIS HOSE REEL ROLLER OUTLET REQUIRES 3-5/8” BALL STOPS, MODELS 85515, 85516 AND 85517. **DO NOT USE** MODELS 83515, 83517 AND B3517 (3” O.D.) BALL STOPS WITH THIS OUTLET.

DESCRIPTION

Model 82206 unit is a heavy duty lubreel designed for bus and truck lubrication, or wherever extra heavy duty construction and longer length delivery hose is required. The reel can be installed as a single unit or in multiple configurations.

Reel features include a reel latch that automatically locks at desired positions as the hose is extended and releases with a short pull on the hose.

OWNER/OPERATOR RESPONSIBILITY

It is the owner/operator’s responsibility to properly use and maintain this equipment.

The instructions and warnings contained in this manual shall be read and understood by the owner/operator prior to operating this equipment.

If an owner/operator does not understand English, the contents of this manual shall be explained in the owner/operator’s native language to assure the owner/operator comprehends.

It is the owner/operator’s responsibility to maintain the legibility of all warning and instruction labels.

The owner/operator shall retain this manual for future reference to important warnings, operating and maintenance instructions.

⚠ WARNING

FAILURE TO HEED THE FOLLOWING WARNINGS INCLUDING MISUSE, OVER PRESSURIZING, MODIFYING PARTS, USING INCOMPATIBLE CHEMICALS AND FLUIDS, OR USING WORN OR DAMAGED PARTS, MAY RESULT IN EQUIPMENT DAMAGE AND/OR SERIOUS PERSONAL INJURY, FIRE, EXPLOSION, OR PROPERTY DAMAGE.

- Do not exceed the stated maximum working pressure of the reel or of the lowest rated component in your system.
- Do not alter or modify any part of this equipment.
- Do not operate this equipment with combustible gas.
- Do not attempt to repair or disassemble the equipment while the system is pressurized.
- Make sure all fluid connections are securely tightened before using this equipment.
- Always read and follow the fluid manufacturer's recommendations regarding fluid compatibility, and the use of protective clothing and equipment.
- Check all equipment regularly and repair or replace worn or damaged parts immediately.
- Never point the dispensing valve at any part of the body or at another person.
- Never try to stop or deflect material from dispensing valve or leading connection or component with your hand or body.
- Always check equipment for proper operation before each use, making sure safety devices are in place and operating properly.
- Always follow the pressure relief procedure after shutting off the pump, when checking or servicing any part of the system, and when installing cleaning or changing any part of the system.

ASSEMBLY

Assemble reel as follows. Refer to SERVICE PARTS for part numbers and location.

A. Assemble arbor and ratchet casting (237670) to support assembly (237656) with four hex head screws (50014) and four hex nuts 51022).

B. Lubricate V-ring seal (237671) and place on arbor and ratchet casting (237670) with lip facing away from arbor ratchet.

C. Assemble power spring assembly (237672) onto arbor and ratchet casting (237670) until spring canister bottoms on arbors shoulder

D. Lubricate V-ring seal (237673) and assemble onto arbor and ratchet casting (237670) with lip facing toward spring canister.

E. Assemble axle (274835) to sheave assembly (237680) with three nuts (51412).

F. Assemble axle and sheave assembly to reel by sliding axle (274835) through bearings in the arbor and ratchet casting (237670). Secure with washer (48217) and TRU-ARC (68424). Shim as required using shims (48385) between washer (48217) and arbor and ratchet casting (237670) to eliminate axle end play.

G. Rotate sheave assembly (237680) and align six mounting holes with mating holes in power spring cannister (237672). Secure with five carriage bolts (237738). carriage bolt (237739) and six nuts (51412).

NOTE:The carriage bolt (237739) is assembled in hole adjacent to pawl pin.

H. Assemble roller outlet arm assembly (237690) on bolts (50014) and secure using three nuts (51022).

I. Assemble roller outlet assembly (237692) to roller outlet arm, assembly (237690) using (4) 50033 Hex Head Screws and (4) 51304 Lock Nuts.

J. Assemble swivel assembly (274840) in axle (274835) and tighten.

K. Assemble adapter assembly (273065) into swivel assembly (274840) and secure with U-keeper (15674).

L. Assemble outlet adapter (273212) into axle (274835). Secure with U-keeper (15674).

M. Assemble hose clamp to sheave assembly (237680) with carriage bolt (237738). Secure with nut (51412).

N. Assemble latch pawl (237683) to pawl pin on power spring assembly (237672) and secure with washer (48327) and TRU-ARC (66316).

O. Assemble extension spring (237695) to latch pawl (237683) and carriage bolt (237739). Secure with locknut (51304).

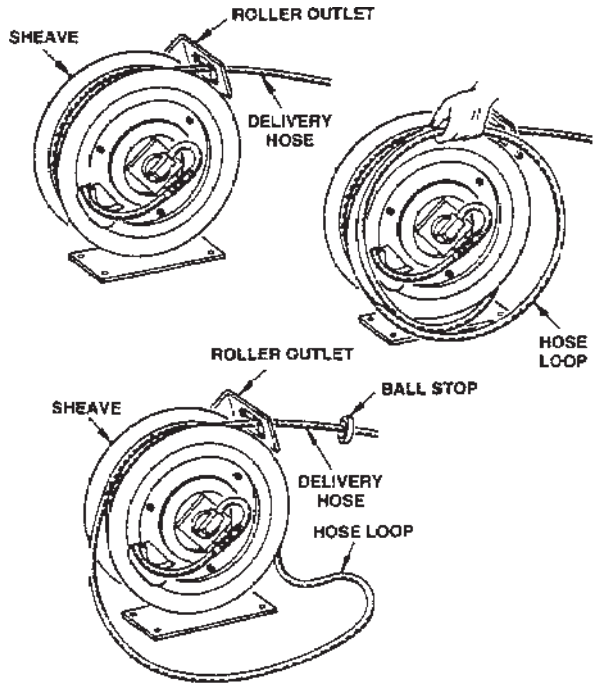

FIGURE (1) DELIVERY

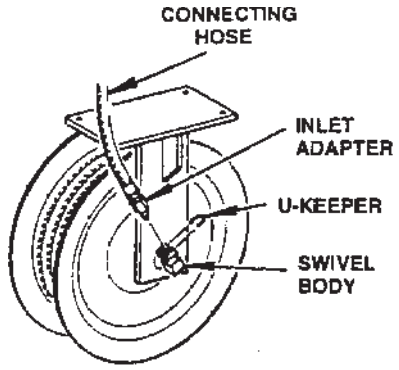

FIGURE (2) CONNECTING

INSTALLATION

DELIVERY HOSE INSTALLATION (MAXIMUM SPRING TENSION)

For smoother operation during retraction and to increase hose life, “detalc” hose by wiping entire hose length with a light lubricating oil before installing on reel.

Assemble outlet adapter to hose and tighten securely. Use teflon tape on threads to prevent leaks.

See Figure (1). Insert hose end with outlet adapter through roller outlet and secure to axle head with U-keeper. Make sure seal is installed correctly in axle before assembling.

⚠ CAUTION

To prevent damaging hose connections and/or components when pulling hose from reel, pull on the hose itself and not on the control valve or swivel. Do not pull or jerk on the hose when fully withdrawn from the reel.

From open side of reel, loop entire length of hose onto reel in a clockwise direction. Pull hose out through roller outlet to wind power spring. When hose is completely extended, latch reel to prevent it from unwinding.

Continue to add loops of hose and pull out hose until power spring winds tight.

IMPORTANT INSTRUCTIONS

Perform the following instructions as stated to correctly set the power spring for maximum tension.

Allow reel to retract two full revolutions and latch reel. Carefully unloop remaining hose from reel.

⚠ CAUTION

To avoid damaging reel components, always make sure hose clamp is properly installed.

Position hose clamp so that approximately 1/2 loop of hose remains on reel and latching does not occur when hose is fully extended.

While holding hose, allow reel to retract hose until desired height from floor is obtained, then latch reel.

Slide ball stop over free end of hose and position slightly below roller outlet. Tighten screws to secure ball stop to hose.

Power spring is now set to maximum tension.

ADJUSTING SPRING TENSION

⚠ CAUTION

To prevent premature power spring failure, spring tension should be adusted so that it requires at least two full turns of the reel sheave before the spring is wound tight.

Should less spring tension be desired, pull hose out from roller outlet to provide slack and latch reel.

Unwind one loop of hose from reel. Pull excess hose out through roller outlet and unlatch reel to retract hose.

Check tension and repeat above procedure until desired tension is obtained.

ATTACHING CONNECTING HOSES

⚠ CAUTION

To prevent damage to connecting hose when installing hose to reel, sufficient clearance must be provided from outside edge of sheave.

See Figure (2). Remove U-keeper and inlet adapter from swivel body.

If adapter assembly (273065) is damaged, replace at this time.

Assemble swivel adapter to connecting hose.

Reconnect inlet adapter to swivel body and replace U-keeper

Connect other end of connecting hose to material supply line source or connection

REEL INSTALLATION AND ADJUSTMENT

See Figure (3). The guide arm may be positioned in 22-1/2 degree increments as shown. For ease of operation and increased hose life, the guide arm should be positioned to minimize hose strain as the delivery hose is pulled tnrough the roller outlet.

Three studs must be used to securely attach the guide arm. It may be necessary to change the position of the hex head screw and one stud in order to obtain the desired guide arm position.

The hose clamp must be relocated if the guide arm is in position B or C. Refer to SERVICE PARTS for hose clamp location

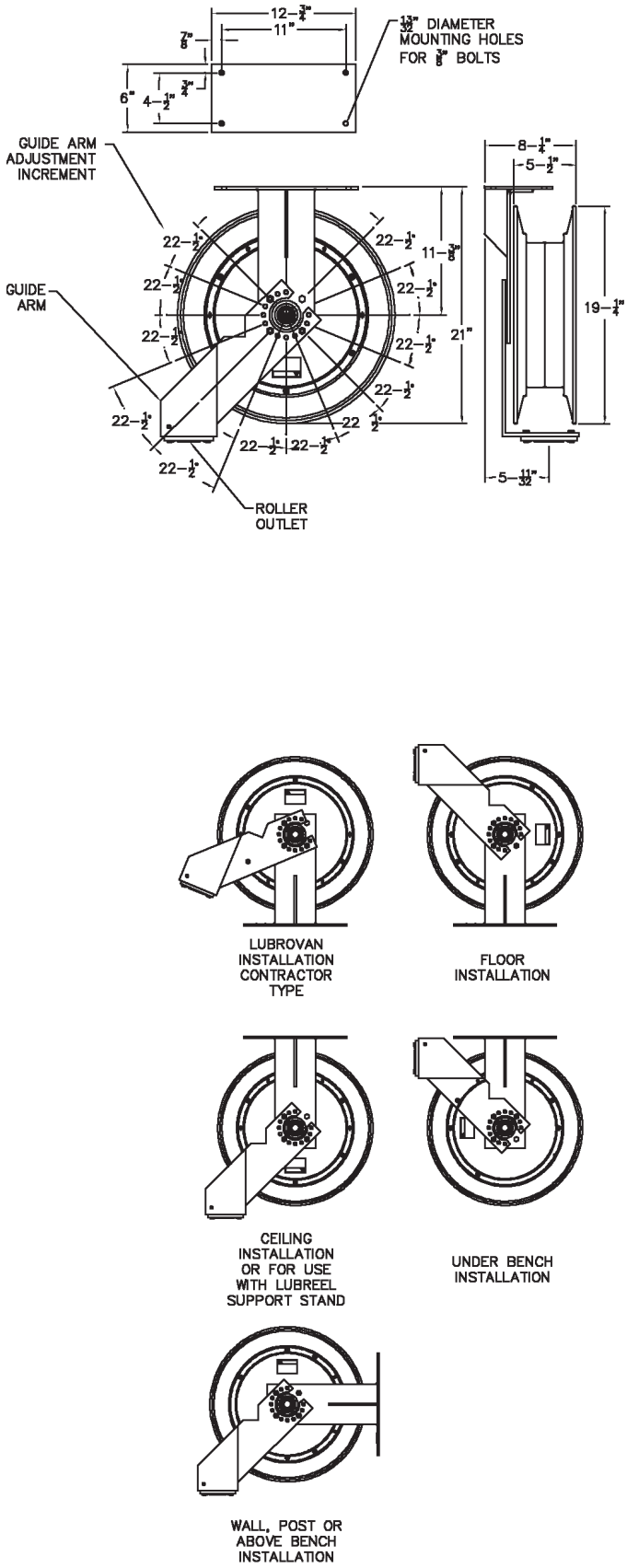

FIGURE (3) REEL INSTALLATION AND ADJUSTMENT

SAFETY INFORMATION

Read and understand all warnings, cautions and instructions before operating this equipment. Extreme caution should be used when operating this equipment as personal injury and/or property damage can result from equipment misuse. Adequate personal protection is recommended to prevent splashing of material on the skin or in the eyes. ALWAYS disconnect air coupler from pump when the pump is not being used.

PRESSURE RELIEF PROCEDURE

Always perform this procedure when the pump is shut off and before checking, servicing, installing, cleaning or repairing any part of this system.

Perform the following procedure:

A. Disconnect the air supply to the pump.

B. Point the dispensing valve away from yourself and others.

C. Open the dispensing valve into an appropriate container until the pressure is relieved.

If the above procedure does not relieve the pressure, the dispensing valve or hose may be restricted. To relieve the pressure, very slowly loosen the hose end coupling. Then loosen completely and clear the dispensing valve and/or hose.

INSPECTION

Prior to operation or maintenance a visual inspection shall be made. Check reel system for leaks, worn or missing parts.

Any reel that appears to be damaged in any way, is badly worn or operates abnormally shall be removed from use until repairs are made. Contact factory authorized service center for repairs.

If overpressurizing of the equipment is believed to have occurred, contact a factory authorized service center for inspecton of the reel.

Annual inspection by a factory authorized service centers recommended.

DISASSEMBLY

To disassemble, perform ASSEMBLY procedures in reverse.

REPAIR

Repair is limited to replacement of listed service parts. Special procedures and tools are required. Contact Linocln Customer Service, One Lincoln Way, St. Louis, MO 63120-1578, (314) 679-4200 for your nearest authorized service center.

When ordering replacement parts, list: part number, description, model number and series letter.

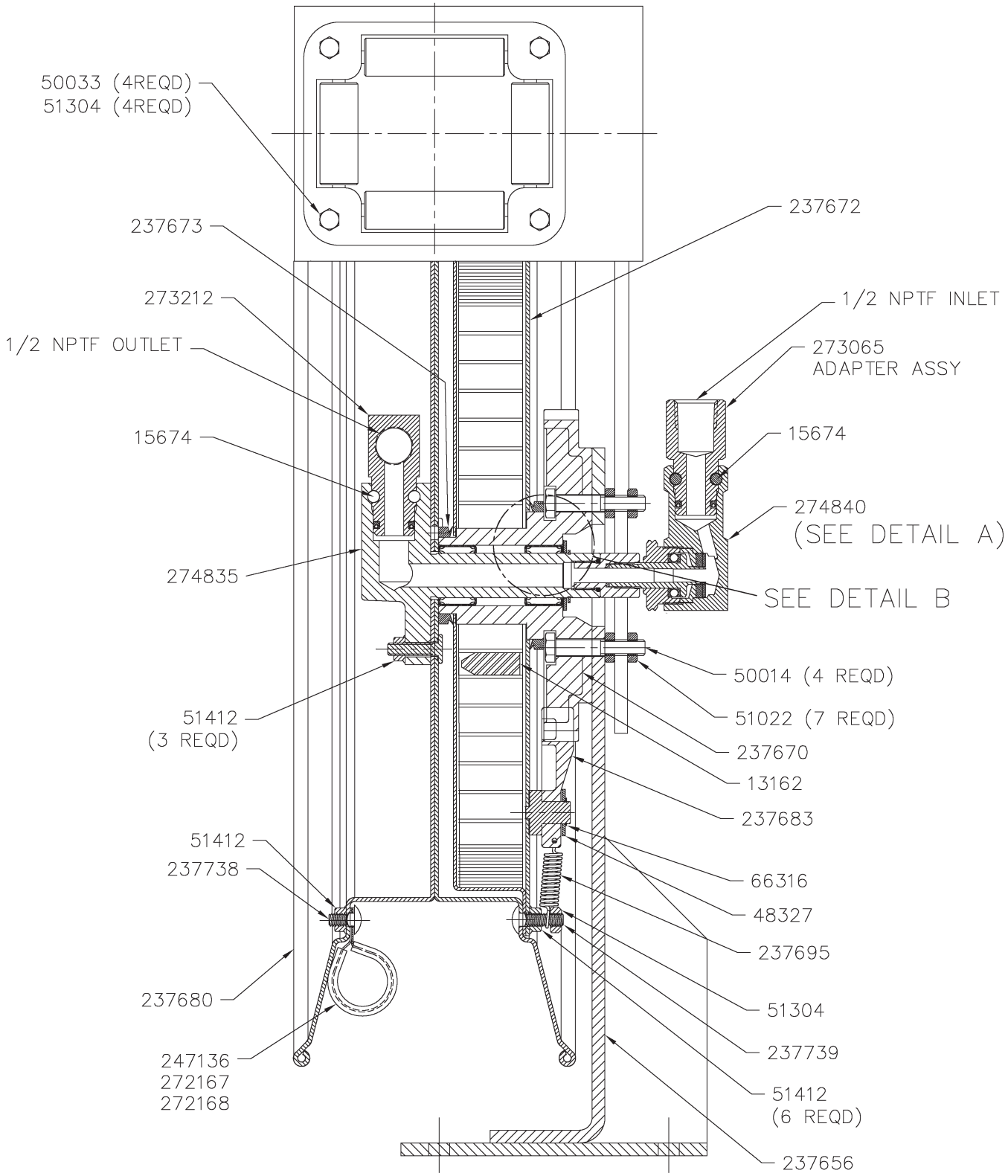
50033 (4REQD)
51304 (4REQD)
237673
273212
1/2 NPTF OUTLET
15674
274835
51412
(3 REQD)
51412
237738
237680
247136
272167
272168
237672
1/2 NPTF INLET
273065
ADAPTER ASSY
15674
274840
(SEE DETAIL A)
SEE DETAIL B
50014 (4 REQD)
51022 (7 REQD)
237670
13162
237683
66316
48327
237695
51304
237739
51412
(6 REQD)
237656

SECTION A-A

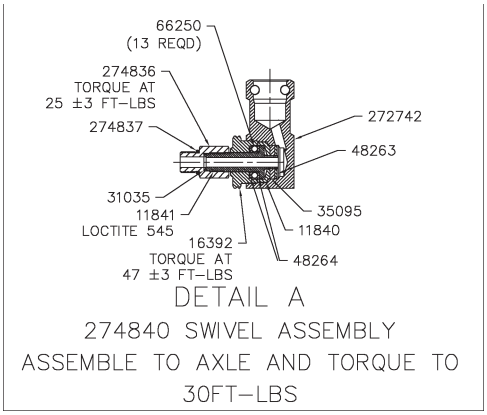
66250
(13 REQD)
274836
TORQUE AT
25 ±3 FT-LBS
274837
272742
48263
31035
11841
LOCTITE 545
16392
TORQUE AT
47 ±3 FT-LBS
35095
11840
48264
DETAIL A
274840 SWIVEL ASSEMBLY
ASSEMBLE TO AXLE AND TORQUE TO
30FT-LBS

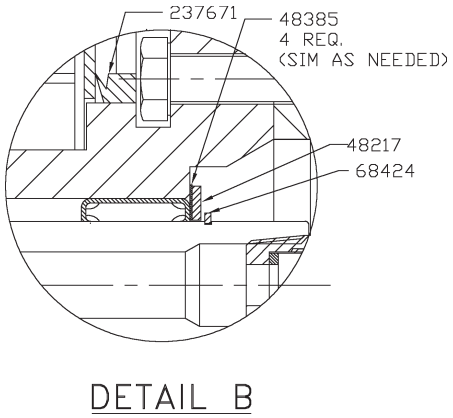
237671
48385
4 REQ.
(SIM AS NEEDED)
48217
68424
DETAIL B

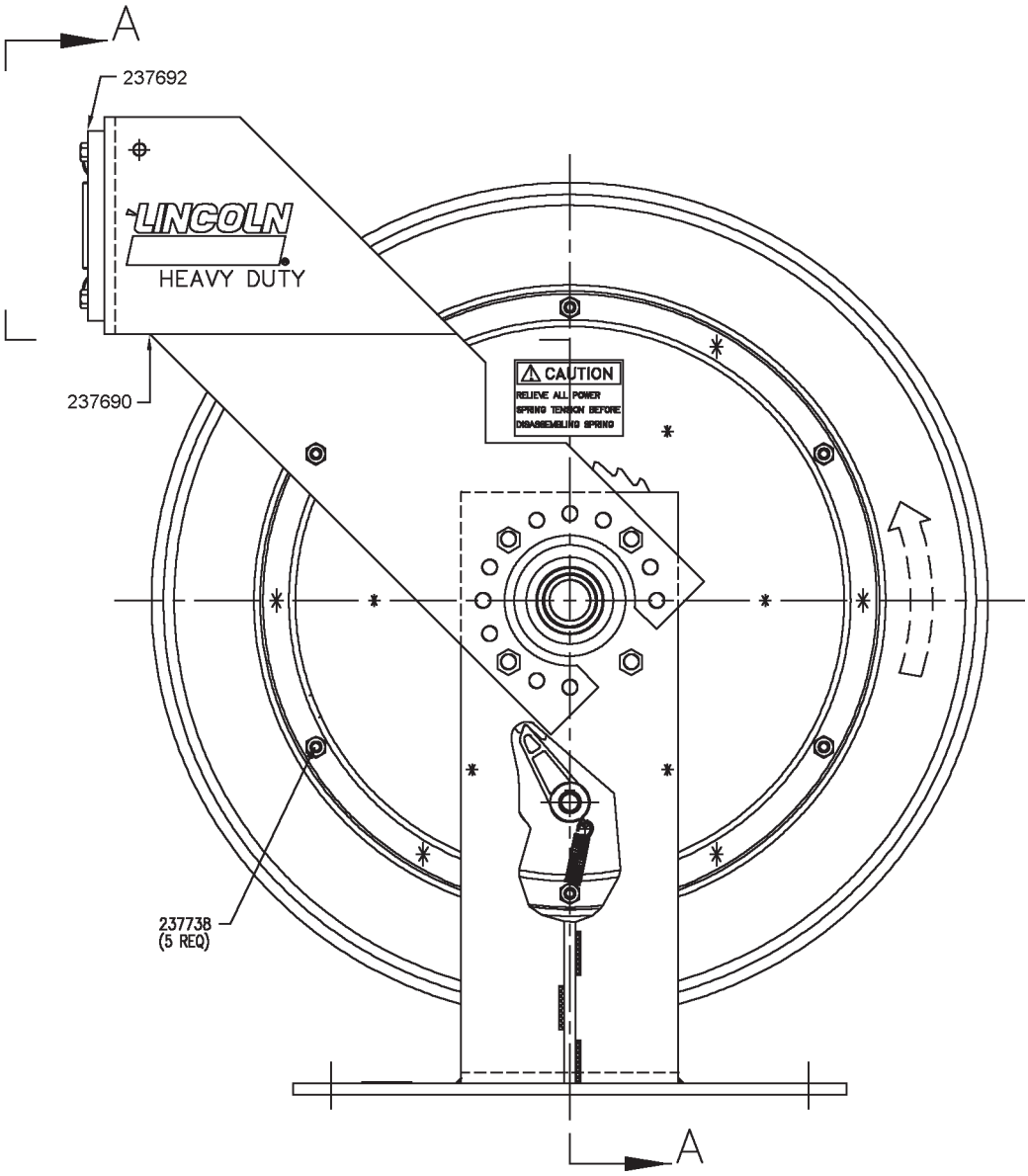
A
237692
LINCOLN
HEAVY DUTY
237690
CAUTION
RELIEVE ALL POWER
SPRING TENSION BEFORE
DISASSEMBLING SPRING
237738
(5 REQ)
A

FIGURE 4.2

SERVICE PARTS (CONT)

PART	QTY	DESCRIPTION	PART	QTY	DESCRIPTION	PART	QTY	DESCRIPTION
11840	1	Packing retainer	51022	7	Hex nut	237692	1	Roller outlet assembly
11841	1	Swivel stud	51304	5	Lock nut	237695	1	Extension spring
13162	1	Pin	51412	10	Hex nut	237738	6	Carriage bolt
15674	2	U-keeper	66250	13	Ball	237739	1	Carriage bolt
16392	1	Swivel nut	66316	1	Tru-arc	247136	1	Hose clamp
31035	1	Gasket	68424	1	Tru-arc	272167	1	Hose Clamp
35095	1	Swivel packing	237656	1	Support asembly	272168	1	Hose Clamp
48217	1	Washer	237670	1	Arbor and ratchet casting	272742	1	Swivel body
48263	1	Packing washer	237671	1	V-ring seal	273065	1	Adapter assembly
48264	2	Thrust washer	237672	1	Power spring assembly	273212	1	Outlet adapter
48327	1	Washer	237673	1	V-ring seal	274835	1	Axle
48385	4	Shim washer	237680	1	Sheave assembly	274836	1	Swivel adapter©
50014	4	Hex head screw	237683	1	Latch pawl	274837	1	O-Ring
50033	4	Screw	237690	1	Roller outlet arm assembly	274840	1	Swivel assembly©

Lincoln Industrial Standard Warranty

LIMITED WARRANTY

Lincoln warrants the equipment manufactured and supplied by Lincoln to be free from defects in material and workmanship for a period of one (1) year following the date of purchase, excluding therefrom any special, extended, or limited warranty published by Lincoln. If equipment is determined to be defective during this warranty period, it will be repaired or replaced, within Lincoln's sole discretion, without charge.

This warranty is conditioned upon the determination of a Lincoln authorized representative that the equipment is defective. To obtain repair or replacement, you must ship the equipment, transportation charges prepaid, with proof of purchase to a Lincoln Authorized Warranty and Service Center within the warranty period.

This warranty is extended to the original retail purchaser only. This warranty does not apply to equipment damaged from accident, overload, abuse, misuse, negligence, faulty installation or abrasive or corrosive material, equipment that has been altered, or equipment repaired by anyone not authorized by Lincoln. This warranty applies only to equipment installed, operated and maintained in strict accordance with the written specifications and recommendations provided by Lincoln or its authorized field personnel.

THIS WARRANTY IS EXCLUSIVE AND IS IN LIEU OF ANY OTHER WARRANTIES, EXPRESS OR IMPLIED, INCLUDING, BUT NOT LIMITED TO, THE WARRANTY OF MERCHANTIBILITY OR WARRANTY OF FITNESS FOR A PARTICULAR PURPOSE.

In no event shall Lincoln be liable for incidental or consequential damages. Lincoln's liability for any claim for loss or damages arising out of the sale, resale or use of any Lincoln equipment shall in no event exceed the purchase price. Some jurisdictions do not allow the exclusion or limitation of incidental or consequential damages, therefore the above limitation or exclusion may not apply to you.

This warranty gives you specific legal rights. You may also have other rights that vary by jurisdiction.

Customers not located in the Western Hemisphere or East Asia: Please contact Lincoln GmbH & Co. KG, Walldorf, Germany, for your warranty rights.

Lincoln Industrial Special Limited Warranties

SPECIAL LIMITED 5 YEAR WARRANTY

Series 20, 25, 40 Bare Pumps, Heavy Duty and 94000 Series Bare Reels

Lincoln warrants series 20, 25, 40 bare pumps, and Heavy Duty and 94000 series (94100, 94300, 94500) bare reels to be free from defects in material and workmanship for five (5) years following the date of purchase. If equipment is determined by Lincoln, in its sole discretion, to be defective during the first year of the warranty period, it will be repaired or replaced at Lincoln's discretion, without charge. In years two (2) and three (3), the warranty on this equipment is limited to repair with Lincoln paying parts and labor only. In years four (4) and five (5), the warranty on this equipment is limited to repair with Lincoln paying for parts only.

Lincoln Industrial Contact Information

To find Lincoln Industrial's Nearest Service Center call the following number, you may also use our website

Customer Service	**314-679-4200**
Website	**lincolnindustrial.com**

© Indicates change

English

This product is designed to meet the requirements of the relevant EC directives. To maintain this status all installation, repair and maintenance work must be carried out by qualified personnel using only original spare parts. Contact you nearest Lincoln dealer or you may call Lincoln Technical Service.

Declaration of Conformity

We, Lincoln Industrial Corporation, declare under our sole responsibility that the product Hose Reel Model 82206 to which this declaration relates, is in conformity with the following standards or other normative documents: EN 292-1:1991, EN 292-2:1991, following the provisions of Directive 89/392/EEC.

German

Dieses Produkt wurde unter Berücksichtigung der in den EG-Richtlinien festgelegten Anforderungen entwickelt. Um diesen Qualitätsanforderungen zu entsprechen,dürfen Installationen, Reparatur- und Wartungsarbeiten nur von Fachleuten unter Anwendung von Original-Ersatzteilen ausgeführt werden. Wenden Sie sich bei technischen Fragen oder beim Bedarf von Ersatzteilen an den nächstgelegenen autorisierten Fachhändler oder an Lincoln Technischer Service.

Konformitätserklärung

Wir, Lincoln Industrial Corporation, erklären in alleiniger Verantwortung, dass das Produkt Schlauchaufroller Modell 82206 auf das sich diese Erklärung bezieht, mit den folgenden Normen oder normativen Dokumenten übereinstimmt: EN 292-1:1991, EN 292-2:1991 gemäß den Bestimmungen der Richtlinie 89/392/EEC.

French

Ce produit est conçu pour répondre aux normes des directives européennes. Pour maintenir celles-ci, l'installation, la réparation et la maintenance ne doivent être effectuées que par un personnel qualifié en n'utilisant que des pièces d'origine. Pour toute assistance technique et la fourniture de pièces détachées, veuillez vous adresser à votre revendeur le plus proche ou Lincoln service technique.

Déclaration de Conformité

Nous, Lincoln Industrial Corporation, déclarons sous notre seule responsabilité que le produit Enrouleur de Tuyau, Modèle 82206 auquel se réfère cette déclaration est conforme aux normes ou autres document normatifs EN 292-1:1991, EN 292-2:1991 conformément aux dispositions de Directive: 89/392/EEC.

Spanish

Este producto está diseñado y construido para satisfacer los requerimientos de las directivas de la Comunidad Europea. Para mantener este estado, es necesario
que la instalación, reparación y mantenimiento sólo sean efectuados por personal cualificado y utilizando recambios originales. Para asesoría técnica o adquisición de recambios, tengan la amabilidad de ponerse en contacto con el concesionario más cercano o Lincoln Servicio Técnico.

Declaración de Conformidad

Lincoln Industrial Corporatión declara bajo su exclusiva responsabilidad la conformidad del producto Carreta portamanguera Modeló 82206, al que se refiere esta declaración, con las normas o otros documentos normativos: EN 292-1:1991, EN292-2:1991 de acuerdo con las disposiciones de Directiva 89/392/EEC.

Paul H. Conley

Paul Conley, Chief Engineer
Lincoln Industrial

One Lincoln Way
St. Louis, MO 63120-1578
USA
Phone +1.314.679.4200
Fax +1.800.424.5359

© Copyright 2006
Printed in USA

Web site:
www.lincolnindustrial.com